Schöck Isokorb® T type H

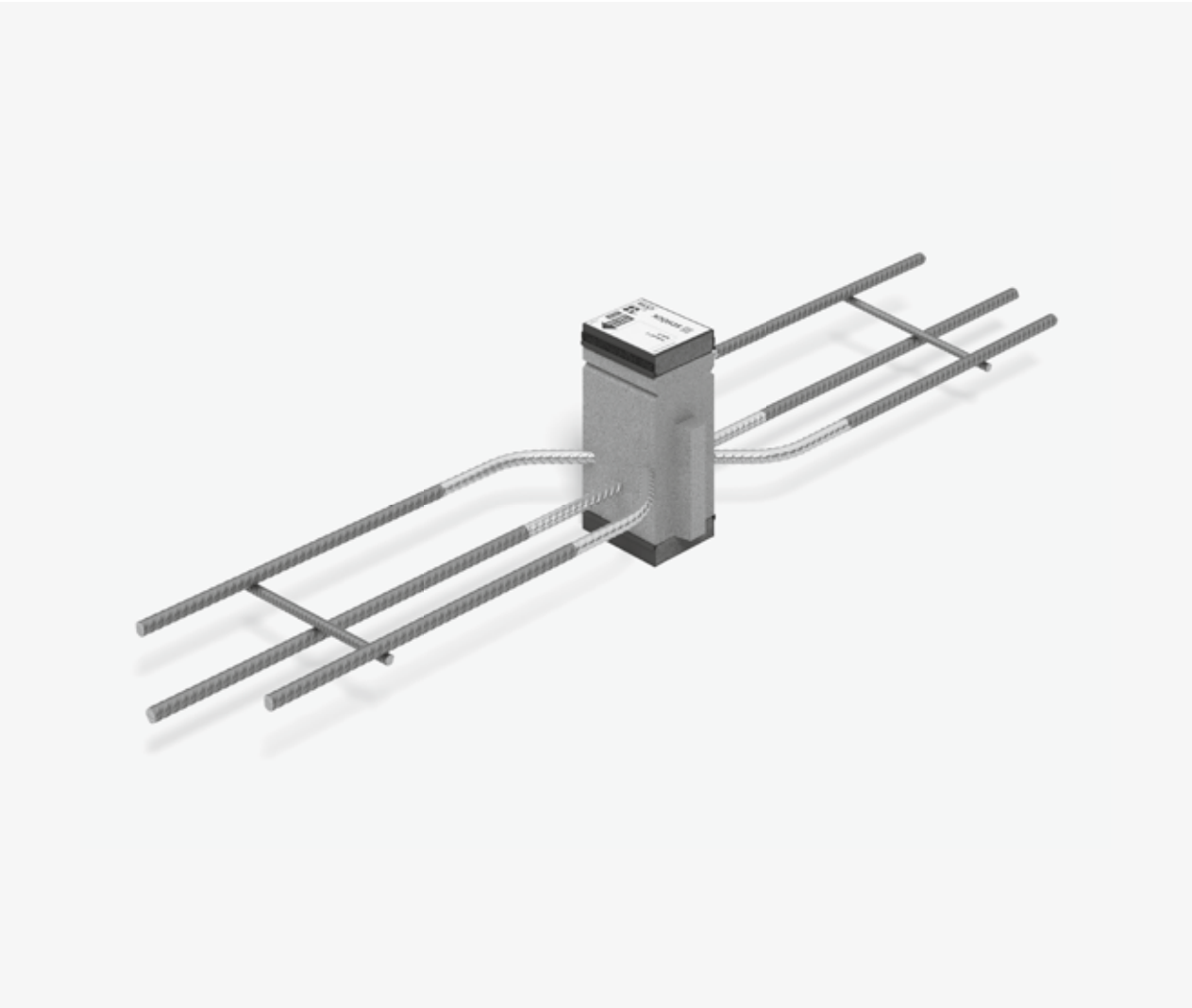

Schöck Isokorb® T type H
Load-bearing thermal insulation element for the transmission of planned horizontal forces parallel and perpendicular to the insulation plane. The element may be used only in conjunction with other Isokorb® types that can absorb moments or shear forces.
The element with the load bearing capacity NN transmits forces perpendicular to the insulation plane.
The element with the load bearing capacity VV-NN transmits forces parallel and perpendicular to the insulation plane.

Element arrangement | Installation cross sections

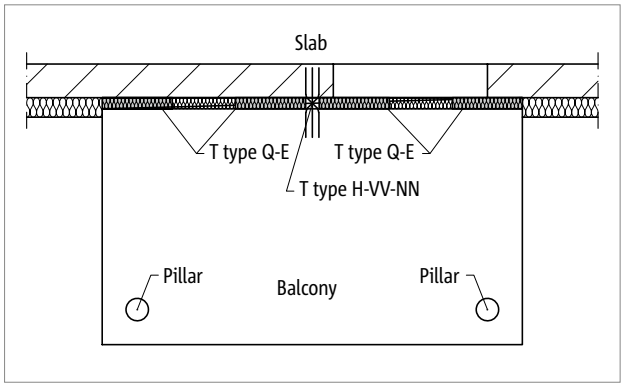

Fig. 132: Schöck Isokorb® T type H: Balcony with pillar support

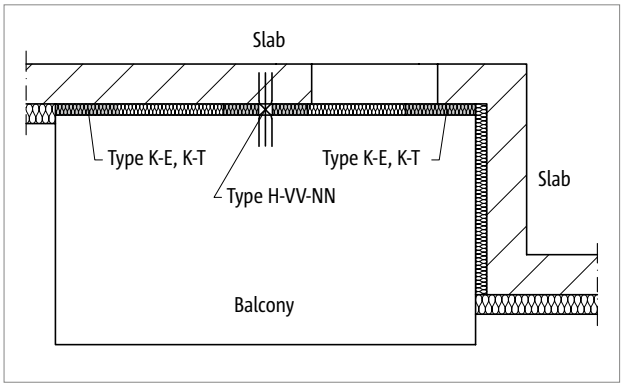

Fig. 133: Schöck Isokorb® T type H: Cantilevered balcony

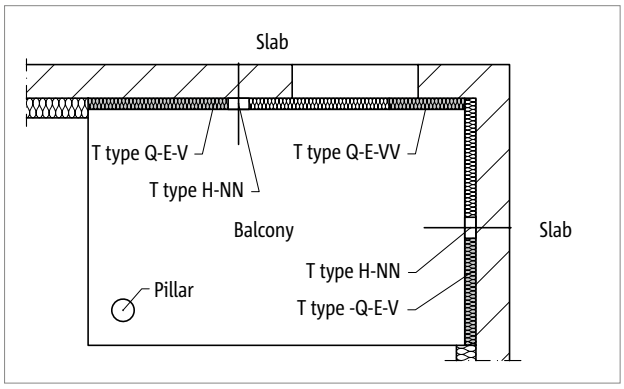

Fig. 134: Schöck Isokorb® T type H: Balcony supported on two sides with pillar

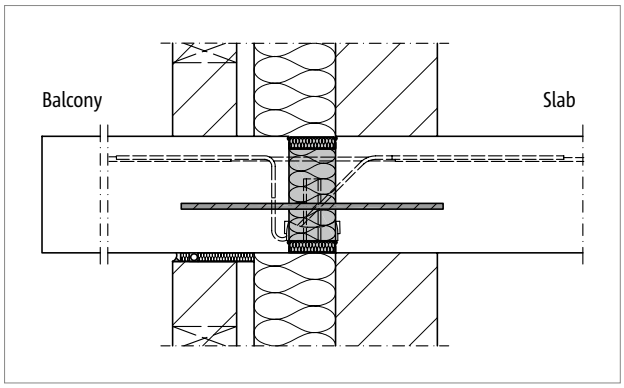

Fig. 135: Schöck Isokorb® T type H-NN: With T type K-E, K-T; connection for core insulation

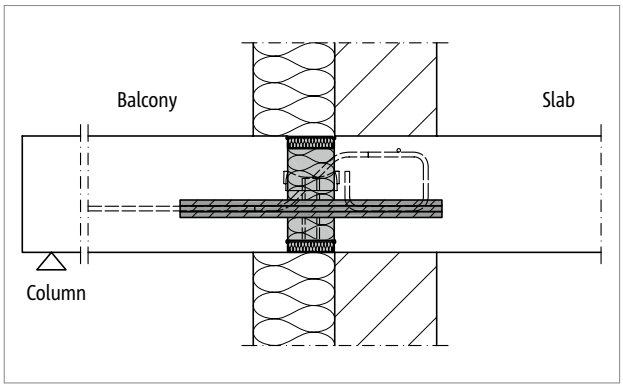

Fig. 136: Schöck Isokorb® T type H-VV-NN: With T type Q-E; connection for exterior insulation

Product selection | Type designations | Special designs

Schöck Isokorb® T type H variants

The configuration of the Schöck Isokorb® T type H can be varied as follows:

- Main load-bearing level:
  VV1, VV2, NN1, NN2
- Secondary load-bearing level:
  NN1
  NN2 is available upon request
- Fire resistance class:
  REI120 (standard)
- Isokorb® height:
  H = 160 to 250 mm
- Isokorb® length:
  L = 100 mm
- Generation:
  5.2

Type designations in planning documents

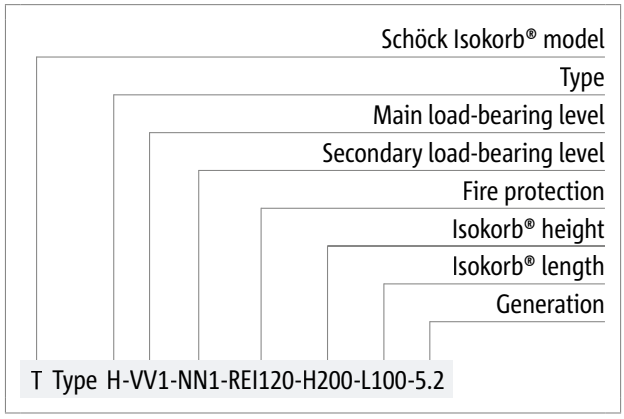

Special designs

Please contact the Technical Design Department if you cannot achieve the connections you require using the standard product variants shown in this technical information (contact details on page 3).

Design C25/30

Schöck Isokorb® T type H 5.2		NN1		NN2		VV1-NN1		VV2-NN1	
Design values with		$V_{Rd,y}$ [kN]	$N_{Rd,x}$ [kN]	$V_{Rd,y}$ [kN]	$N_{Rd,x}$ [kN]	$V_{Rd,y}$ [kN]	$N_{Rd,x}$ [kN]	$V_{Rd,y}$ [kN]	$N_{Rd,x}$ [kN]
Concrete strength class	C25/30	0.0	±11.6	0.0	±49.2	±10.4	±11.6	±39.2	±49.2

Schöck Isokorb® T type H 5.2	NN1	NN2	VV1-NN1	VV2-NN1
Placement with	Isokorb® length [mm]			
	100	100	100	100
Shear force bars, horizontal	-	-	2 × 1 ⌀ 10	2 × 1 ⌀ 12
Tension bars/compression bars	1 ⌀ 10	1 ⌀ 12	1 ⌀ 10	1 ⌀ 12

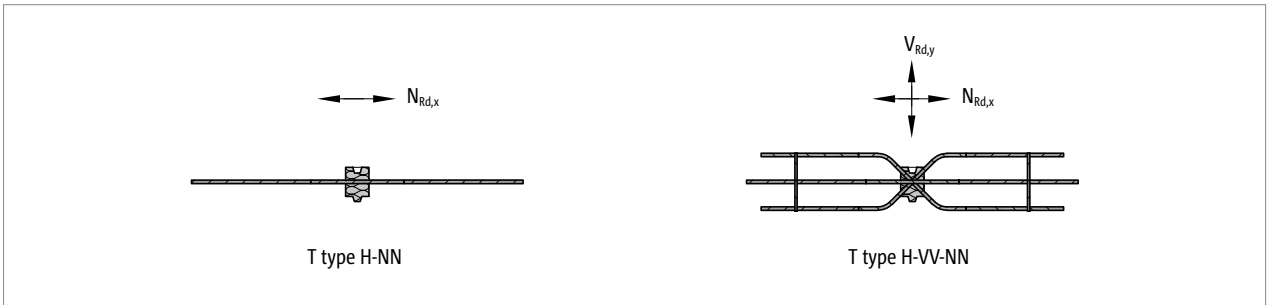

Fig. 137: Schöck Isokorb® T type H: Type selection

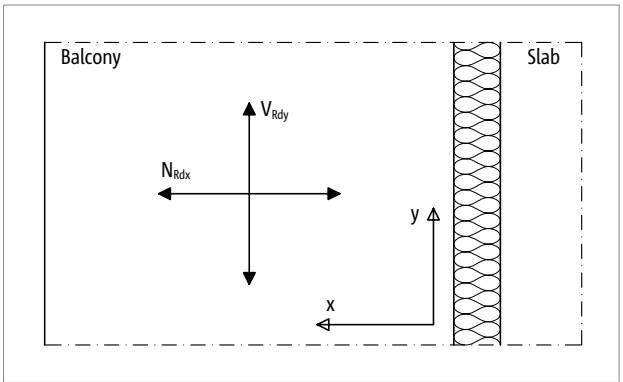

Fig. 138: Schöck Isokorb® T type H: Sign rule for the design

Notes on design

- With the design of a linear connection, attention is to be paid that, with the employment of the supplementary type H, the design values of the linear connection can be reduced (e.g. T type Q-E with L = 1.0 m and T type H with L = 0.1 m in regular exchange signifies a reduction by ca. 9 % of v_{Rd} of the linear connection using type T type Q-E).
- The required number of Schöck Isokorb® T type H-NN or H-VV-NN is to be laid down according to static requirements.

Expansion joint spacing

Maximum expansion joint spacing

If the component length exceeds the maximum expansion joint spacing e, then expansion joints must be incorporated into the external concrete components at right angles to the insulating layer in order to limit the effect as a result of temperature changes. With fixed points such as, for example, corners of balconies, or with the employment of the supplementary Schöck Isokorb® T types H half the maximum expansion joint spacing e/2 from the fixed point applies.
The shear force transmission in the expansion joint can be ensured using a longitudinally displaceable shear force dowel, e.g. Schöck Stacon®.

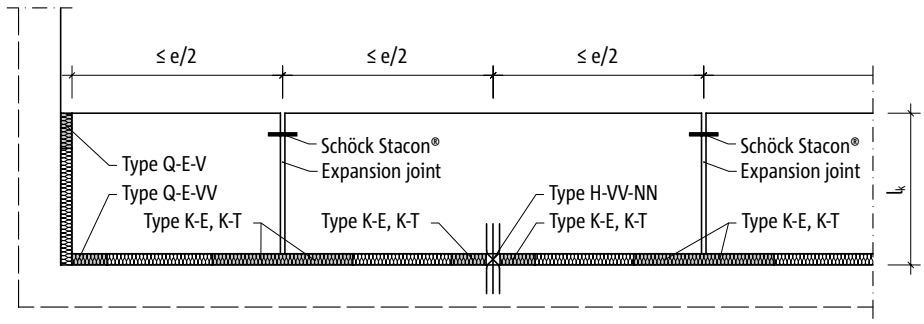

Fig. 139: Schöck Isokorb® T type H: Expansion joint spacing

Schöck Isokorb® T type H combined with	T type K-E, K-T	T type Q-E, Q-T	T type D
Maximum expansion joint spacing from fixed point e/2 [m]	≤ e/2 see T type K-E, K-T	≤ e/2 see T type Q-E, Q-T	≤ e/2 see T type D

Expansion joints

- A maximum of three Schöck Isokorb® T type H-VV-NNs may be connected to a balcony. Another Schöck Isokorb® type with a connection length of one metre must be arranged between two of these elements.
- If two Schöck Isokorb® T type H-NNs are arranged on each edge of the expansion joint, then the following permitted expansion joint spacings must be maintained for T type H-NN:
  T type H-NN1: 13.0 m
  T type H-NN2: 11.7 m
  In addition, the combination of Schöck Isokorb® types being used should also be taken into account for determining the maximum expansion joint spacings.

Product description

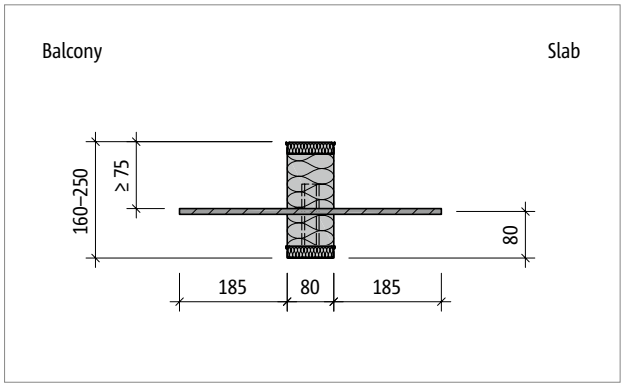

Fig. 140: Schöck Isokorb® T type H-NN1: Product section

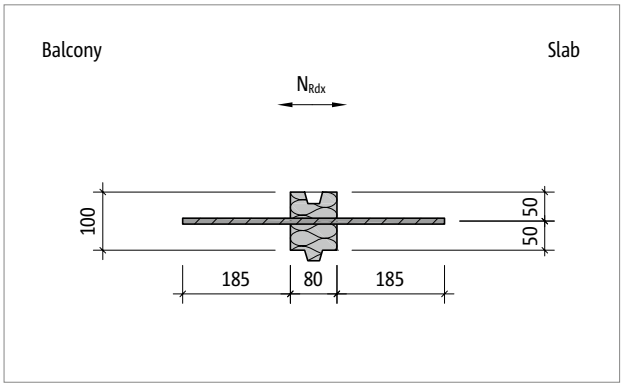

Fig. 141: Schöck Isokorb® T type H-NN1: Product layout

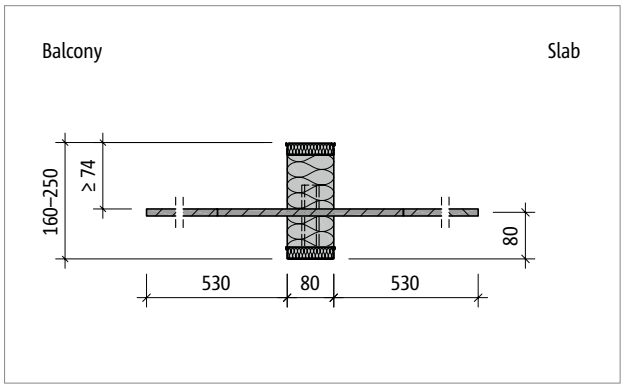

Fig. 142: Schöck Isokorb® T type H-NN2: Product section

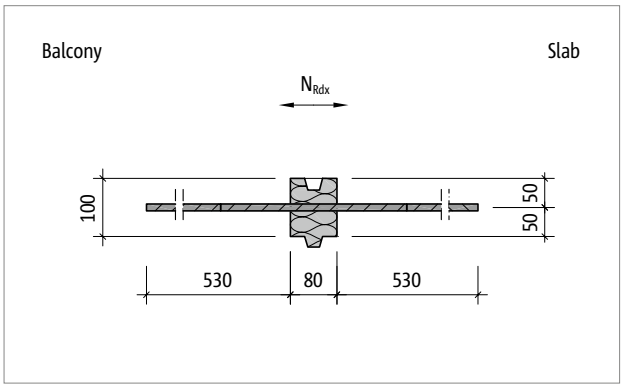

Fig. 143: Schöck Isokorb® T type H-NN2: Product layout

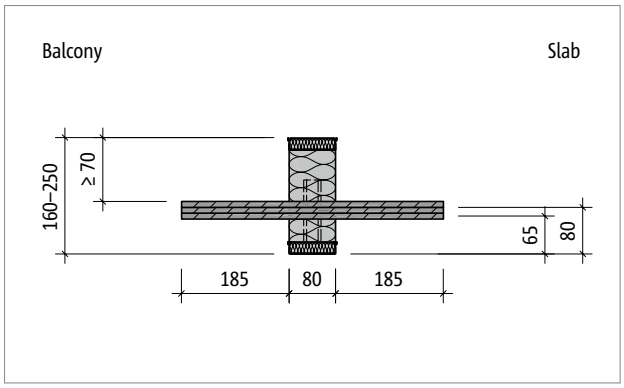

Fig. 144: Schöck Isokorb® T type H-VV1-NN1: Product section

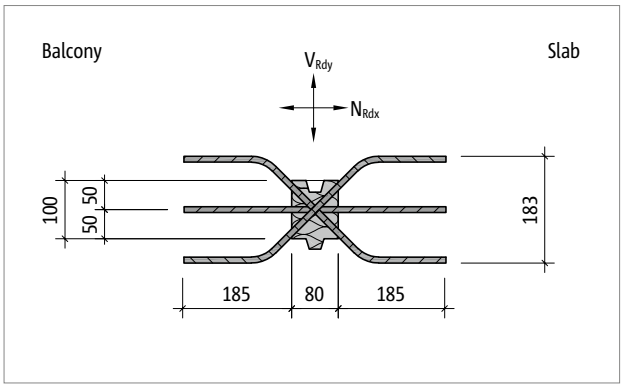

Fig. 145: Schöck Isokorb® T type H-VV1-NN1: Product layout

Product description

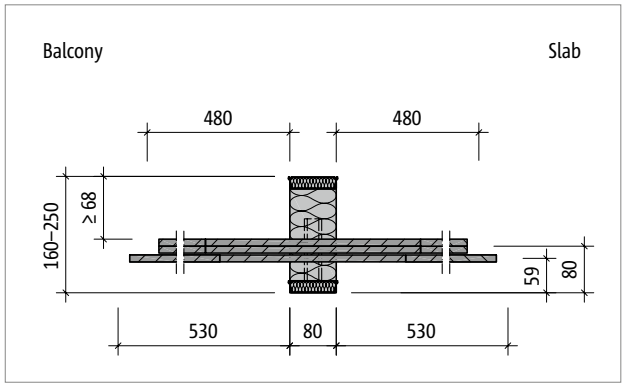

Fig. 146: Schöck Isokorb® T type H-VV2-NN1: Product section

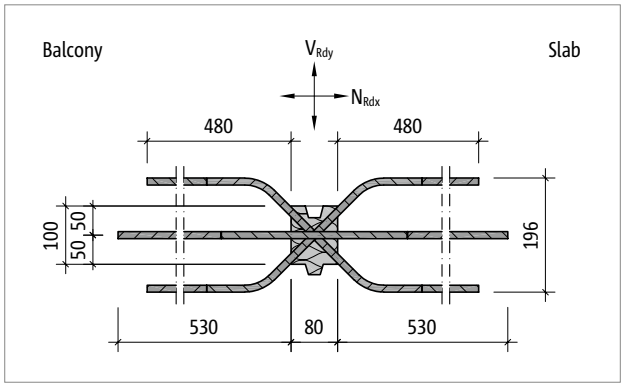

Fig. 147: Schöck Isokorb® T type H-VV2-NN1: Product layout

Design example

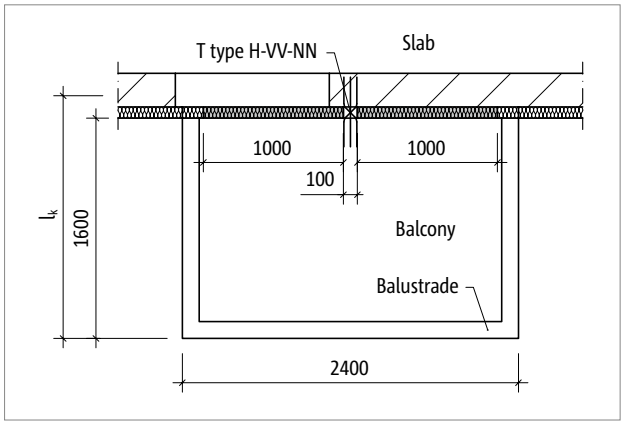

Fig. 148: Schöck Isokorb® T type K-E, K-T with type H: Static system, layout

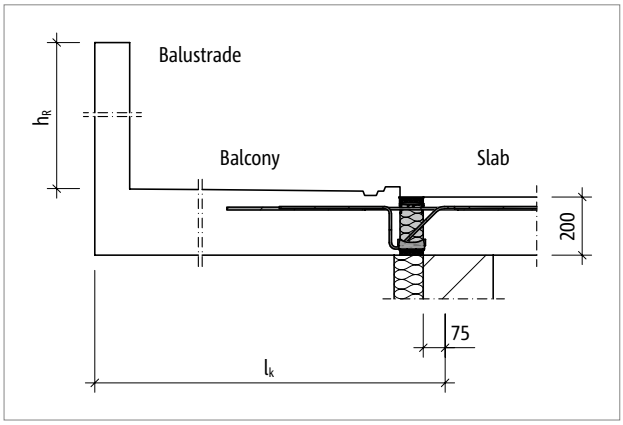

Fig. 149: Schöck Isokorb® T type K-E, K-T: Static system, cross-section

Static system and load assumptions

Geometry:	Schöck Isokorb® height	H = 200 mm
	cantilever length	l_k = 1.755 m
	average balcony slab thickness	h = 230 mm
	three-sided wraparound balustrade	h_R = 1.0 m
Load assumptions:	balcony slab	g = 5.75 kN/m²
	live load	q = 3.5 kN/m²
	Edge load (balustrade)	g_R = 3.0 kN/m
	wind pressure	w_e = 1.0 kN/m²
Exposure classes:	exterior XC 4	
	interior XC 1	
Selected:	concrete strength class C25/30 for the floor	
	concrete strength class C45/55 for the balcony	
	Concrete cover c_v = 35 mm for Schöck Isokorb® tension bars	
Connection geometry:	no height offset, no floor downstand beam, no balcony upstand	
Floor support:	floor slab edge indirectly supported	
Balcony support:	restraint of the cantilever slab using T type K-E	

Design example

Proof of limits of load-bearing capacity (moment stress and shear force)

The calculation takes into account the length of the connection with Schöck Isokorb® (= 2.40 m / 2.00 m) shown in the above drawing.

Internal forces:

m_{Ed} = -(0.5 • [2.40 • (γ_G • g + γ_Q • q) + 2 • γ_G • g_R] • l_k^2 + 2.40 • γ_G • g_R • l_k) / 2.00

m_{Ed} = -(0.5 • [2.40 • (1.2 • 5.75 + 1.5 • 3.5) + 2 • 1.2 • 3.0] • 1.755^2 + 2.40 • 1.2 • 3.0 • 1.755) / 2.00

= +35.6 kNm/m

v_{Ed} = +([2.40 • [(γ_G • g +γ_Q • q) + 2 • γ_G • g_R] • l_k + 2.40 • γ_G • g_R) / 2.00

v_{Ed} = +([2.40 • [(1.2 • 5.75 + 1.5 • 3.5) + 2 • 1.2 • 3.0] • 1.755 + 2.40 • 1.2 • 3.0) / 2.00

= +36.2 kN/m

Selected: **2 pieces of Schöck Isokorb® T type K-T-M5-V1-REI120-CV35-H200-L1000**

m_{Rd} = -46.0 kNm/m (see page 36) > m_{Ed}

v_{Rd} = +56.0 kN/m (see page 36) > v_{Ed}

$N_{Ed,x}$ = γ_Q • w_e • 2.40 • (h + h_R) = 1.5 • 1.0 • 2.40 • (0.23 + 1.0) = 4.4 kN (frontal wind)

$V_{Ed,y}$ = γ_Q • w_e • 2 • 1.6 • (h + h_R) = 1.5 • 1.0 • 2 • 1.60 • (0.23 + 1.0) = 5.9 kN (wind from the side)

Selected: **1 Schöck Isokorb® T type H-VV1-NN1-REI120-H200-L100**

$N_{Rd,x}$ = ±11.6 kN (see page 82) > $N_{Ed,x}$

$V_{Rd,y}$ = ±10.4 kN (see page 82) > $V_{Ed,y}$

Proof for the exceptional load case of earthquake

Load assumptions for earthquakes: $F_{a,x}$ = ±15.0 kN/m (horizontal, parallel to the joint)

$F_{a,y}$ = ±15.0 kN/m (horizontal, perpendicular to the joint)

Internal forces:

$N_{EdA,x}$ = ±2.40 m • $F_{a,x}$ = ±2.40 m • 15.0 kN/m = 36.0 kN (force perpendicular to the joint)

$V_{EdA,y}$ = ±2.40 m • $F_{a,y}$ = ±2.40 m • 15.0 kN/m = 36.0 kN (force parallel to the joint)

Selected: **1 Schöck Isokorb® T type H-VV2-NN1-REI120-H200-L100**

$N_{Rd,x}$ = ±49.2 kN (see page 82) > $N_{EdA,x}$

$V_{Rd,y}$ = ±39.2 kN (see page 82) > $V_{EdA,y}$

Design example

- The notes on expansion joint spacing are to be observed, see page 83.

Check list

- ☐ Have the loads on the Schöck Isokorb® connection been specified at design level?
- ☐ Is the relevant concrete strength class taken into account when selecting the design and calculation table?
- ☐ Are the maximum allowable expansion joint spacings taken into account?
- ☐ Is the required component geometry present with the connection to a floor or a wall? Is a special design required?
- ☐ Have the fire protection requirements been clarified?