Schöck Isokorb® T type K-E, K-T

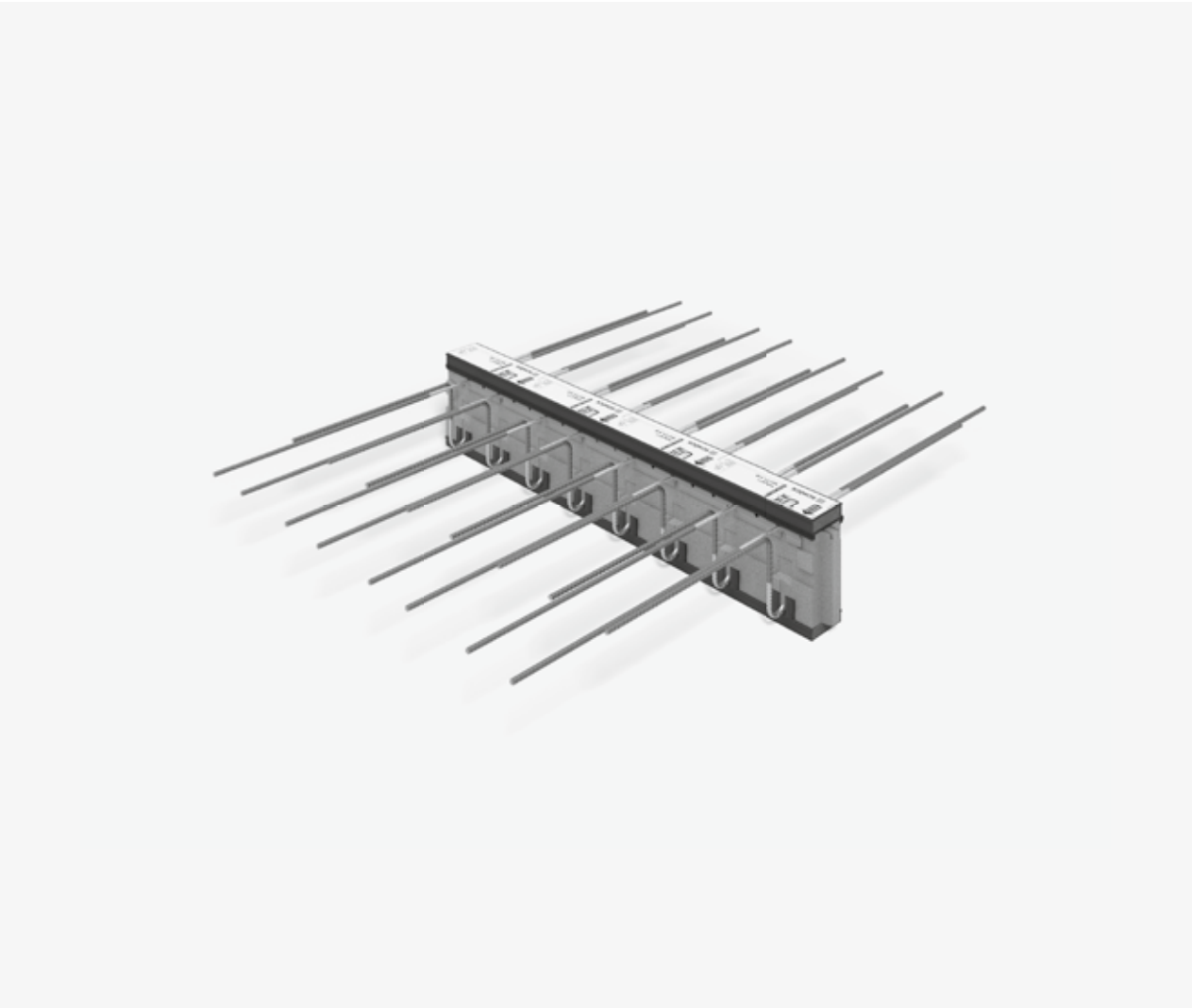

Schöck Isokorb® T type K-E, K-T
Load-bearing thermal insulation element for cantilevered balconies. The element transmits positive moments and positive shear forces. Schöck Isokorb® T Typ K-T with the load-bearing capacity VV additionally transmits negative shear forces.

Element arrangement | Installation cross sections

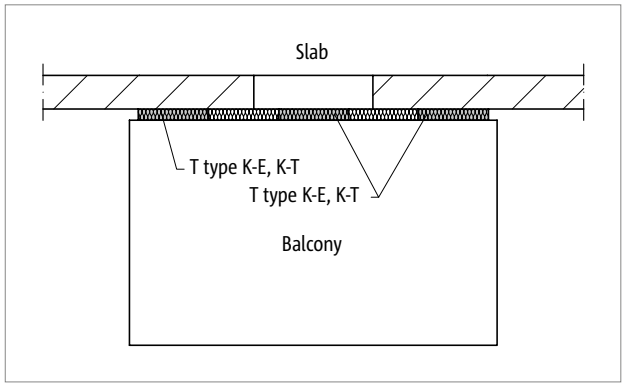

Fig. 39: Schöck Isokorb® T type K-E, K-T: Cantilevered balcony

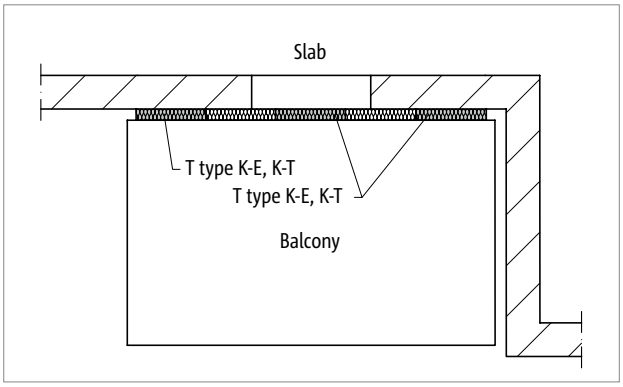

Fig. 40: Schöck Isokorb® T type K-E, K-T: Balcony with façade offset

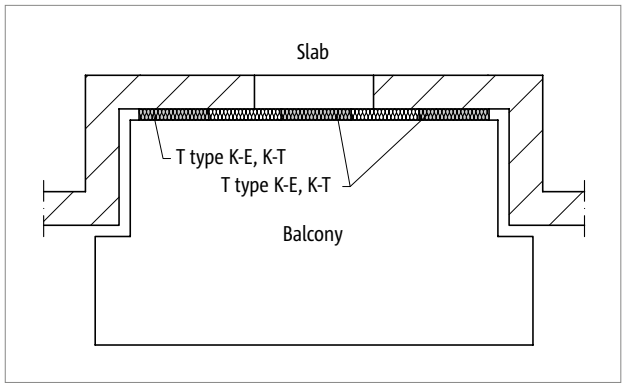

Fig. 41: Schöck Isokorb® T type K-E, K-T: Balcony with façade recess

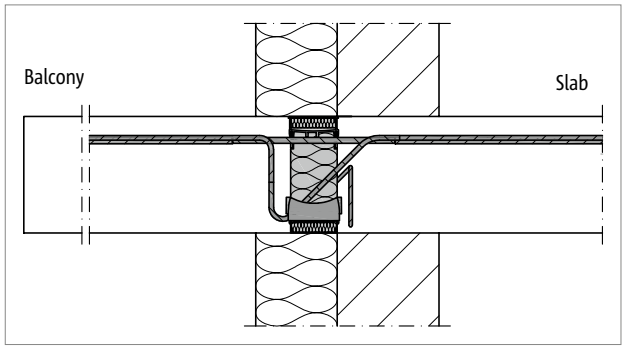

Fig. 42: Schöck Isokorb® T type K-E, K-T: Connection for a thermal insulation bonded system WDVS

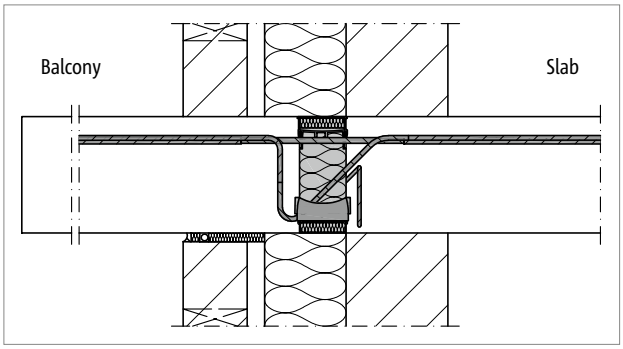

Fig. 43: Schöck Isokorb® T type K-E, K-T: Connection for core insulation

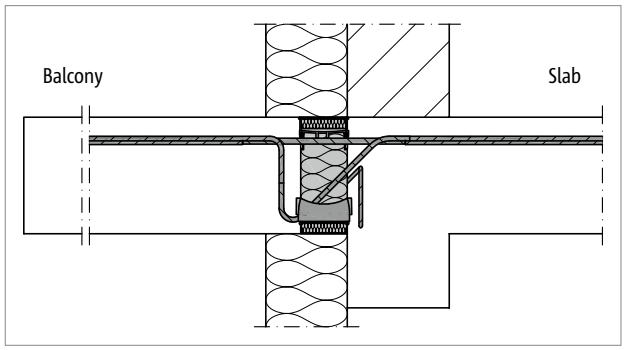

Fig. 44: Schöck Isokorb® T type K-E, K-T: Connection for edge beam and thermal insulation composite system (WDVS)

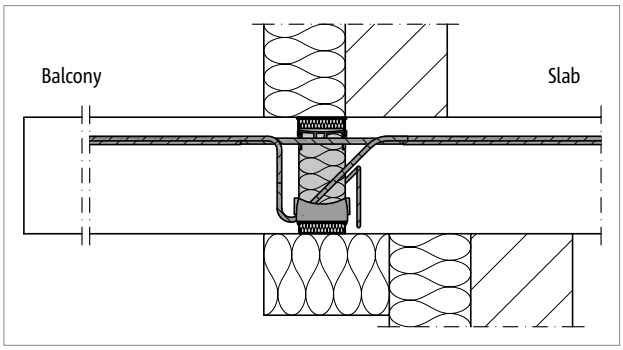

Fig. 45: Schöck Isokorb® T type K-E, K-T: Connection for an indirectly supported floor and WDVS

Product selection | Type designations | Special designs

Schöck Isokorb® T type K variants

The configuration of the Schöck Isokorb® T type K can be varied as follows:

- Configuration variant:
  type K-E: Available in lengths L1000, L500 and L250; can be used with Schöck IDock®
  type K-T: Available in lengths L1000 and L500
- Main load-bearing level:
  M1 to M10
  type K-E with main load-bearing level M2, M4, M6, M8
  type K-T with main load-bearing level M1, M3, M5, M7, M9, M10
- Secondary load-bearing level:
  type K-E: V1, V2
  type K-T: V1, V2, VV1
- Fire resistance class:
  REI120 (standard)
- Concrete cover of the tension bars:
  CV30 = 30 mm, CV35 = 35 mm, CV50 = 50 mm
- Isokorb® height:
  H = 160–250 mm for concrete cover CV30, CV35
  H = 180–250 mm for concrete cover CV50
- Isokorb® length:
  L1000 = 1000 mm, L500 = 500 mm, L250 = 250 mm
- Generation:
  3.2

Type designations in planning documents

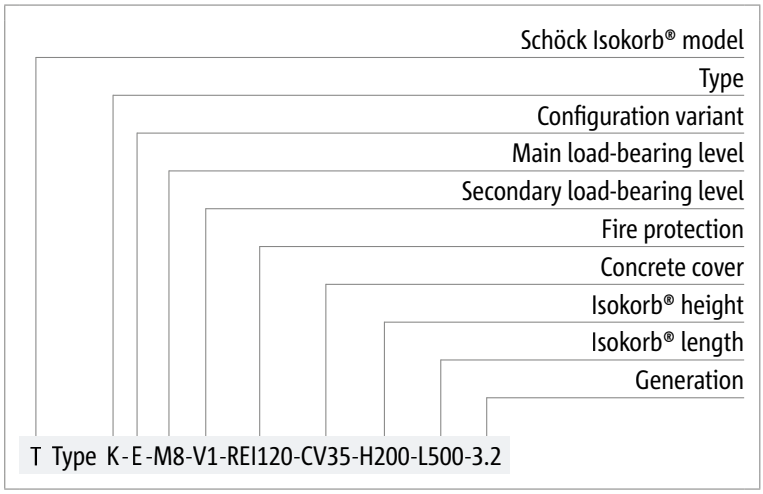

Special designs

Please contact the Technical Design Department if you cannot achieve the connections you require using the standard product variants shown in this technical information (contact details on page 3).
This also applies with additional requirements as a result of precast concrete construction. For additional requirements determined by manufacturing or transportation there are solutions available with coupler bars.

Design

Design

- The Schöck Isokorb® T type K-E with Schöck IDock® can be used for a flexible design of the construction process See Schöck IDock® technical information.
- With CV50, H = 180 mm is the lowest Isokorb® height, this requires a minimum slab thickness of h = 180 mm.
- For cantilever slab constructions without live load, stressed from moment loading without direct shear force effectiveness or lightweight constructions, contact our Design Support department.

Static system

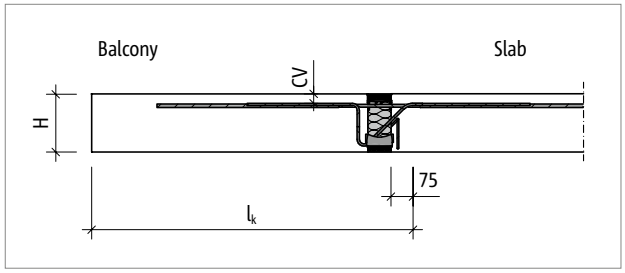

Fig. 46: Schöck Isokorb® T type K-E, K-T: Static system, cross-section

Design C25/30

Schöck Isokorb® T type K-E, K-T 3.2				K-T-M1	K-E-M2	K-T-M3	K-E-M4	K-T-M5	K-E-M6
Design values with	Concrete cover CV [mm]			Concrete strength class ≥ C25/30					
	CV30	CV35	CV50	$m_{Rd,y}$ [kNm/m]					
Isokorb® height H [mm]		160		8.5	16.5	23.8	22.6	30.5	32.5
	160		180	9.0	17.5	25.1	24.0	32.4	34.5
		170		9.6	18.5	26.5	25.4	34.3	36.6
	170		190	10.1	19.5	27.9	26.7	36.2	38.7
		180		10.6	20.6	29.2	28.1	38.2	40.8
	180		200	11.2	21.5	30.6	29.5	40.1	42.9
		190		11.7	22.6	31.9	30.9	42.1	45.1
	190		210	12.2	23.6	33.3	32.3	44.0	47.2
		200		12.8	24.7	34.6	33.7	46.0	49.4
	200		220	13.4	25.7	36.0	35.1	48.0	51.5
		210		13.9	26.7	37.3	36.6	49.9	53.6
	210		230	14.5	27.8	38.7	38.0	51.8	55.8
		220		15.1	28.9	40.0	39.5	53.6	58.0
	220		240	15.6	29.9	41.4	40.9	55.5	60.1
		230		16.2	31.0	42.7	42.4	57.4	62.4
	230		250	16.8	32.0	44.1	43.8	59.3	64.5
		240		17.4	33.2	45.4	45.2	61.1	66.8
	240			18.0	34.2	46.8	46.5	63.0	68.9
		250		18.6	35.3	48.1	47.9	64.9	71.2
	250			19.1	36.4	49.5	49.2	66.8	73.4
$v_{Rd,z}$ [kN/m]									
Secondary load-bearing level			V1	28.0	56.0	42.0	99.5	56.0	99.5
			V2	-	99.5	-	-	99.5	-

Schöck Isokorb® T type K-E, K-T 3.2	K-T-M1	K-E-M2	K-T-M3	K-E-M4	K-T-M5	K-E-M6
Placement with	Isokorb® length [mm]					
	1000	1000	1000	1000	1000	1000
Tension bars V1/V2	4 ⌀ 8	8 ⌀ 8	12 ⌀ 8	8 ⌀ 10	16 ⌀ 8	8 ⌀ 12
Shear force bars V1	4 ⌀ 6	8 ⌀ 6	6 ⌀ 6	8 ⌀ 8	8 ⌀ 6	8 ⌀ 8
Shear force bars V2	-	8 ⌀ 8	6 ⌀ 8	-	8 ⌀ 8	-
Pressure bearing V1/V2 [piece]	4	8	8	8	10	12
Special stirrups	-	-	-	-	-	4

Schöck Isokorb® T type K-E, K-T 3.2	K-T-M1	K-E-M2	K-T-M3	K-E-M4	K-T-M5	K-E-M6
Placement with	Isokorb® length [mm]					
	500	500	500	500	500	500
Tension bars V1/V2	2 ⌀ 8	4 ⌀ 8	6 ⌀ 8	4 ⌀ 10	8 ⌀ 8	4 ⌀ 12
Shear force bars V1	2 ⌀ 6	4 ⌀ 6	3 ⌀ 6	4 ⌀ 8	4 ⌀ 6	4 ⌀ 8
Shear force bars V2	-	4 ⌀ 8	-	-	4 ⌀ 8	-
Pressure bearing V1/V2 [piece]	2	4	4	4	5	6
Special stirrups	-	-	-	-	-	2

Design

- Static system and information on the design see page 35.
- T type K-E is also available in length L250.

Design C25/30

Schöck Isokorb® T type K-E, K-T 3.2				K-T-M7	K-E-M8	K-T-M9	K-T-M10
Design values with	Concrete cover CV [mm]			Concrete strength class ≥ C25/30			
	CV30	CV35	CV50	$m_{Rd,y}$ [kNm/m]			
Isokorb® height H [mm]		160		40.4	40.7	46.4	46.4
	160		180	42.9	43.2	49.2	49.2
		170		45.6	45.8	52.1	52.1
	170		190	48.1	48.3	55.0	55.0
		180		50.8	50.9	57.8	57.8
	180		200	53.3	53.4	60.7	60.7
		190		56.0	56.0	63.5	63.5
	190		210	58.6	58.5	66.4	66.4
		200		61.3	61.1	69.3	69.3
	200		220	63.9	63.6	72.1	72.1
		210		66.6	66.1	75.0	75.0
	210		230	69.2	68.7	77.8	77.8
		220		71.7	71.2	80.7	80.7
	220		240	74.3	73.8	83.6	83.6
		230		76.8	76.3	86.4	86.4
	230		250	79.4	78.9	89.3	89.3
		240		81.9	81.4	92.2	92.2
	240			84.5	84.0	95.0	95.0
		250		87.0	86.5	97.9	97.9
	250			89.5	89.0	100.7	100.7
				$v_{Rd,z}$ [kN/m]			
Secondary load-bearing level		V1		99.5	99.5	99.5	124.4
		VV1		99.5/−49.8	-	-	124.4/−49.8

Schöck Isokorb® T type K-E, K-T 3.2	K-T-M7	K-E-M8	K-T-M9	K-T-M10
Placement with	Isokorb® length [mm]			
	1000	1000	1000	1000
Tension bars V1/VV1	10 ⌀ 12	8 ⌀ 14	12 ⌀ 12	14 ⌀ 12
Shear force bars V1	8 ⌀ 8	8 ⌀ 8	8 ⌀ 8	10 ⌀ 8
Shear force bars VV1	8 ⌀ 8 + 4 ⌀ 8	-	-	10 ⌀ 8 + 4 ⌀ 8
Pressure bearing V1/ V2/VV1 [pce]	16	16	18	18
Special stirrups	4	4	4	4

Schöck Isokorb® T type K-E, K-T 3.2	K-T-M7	K-E-M8	K-T-M9	K-T-M10
Placement with	Isokorb® length [mm]			
	500	500	500	500
Tension bars V1/VV1	5 ⌀ 12	4 ⌀ 14	6 ⌀ 12	7 ⌀ 12
Shear force bars V1	4 ⌀ 8	4 ⌀ 8	4 ⌀ 8	5 ⌀ 8
Shear force bars VV1	4 ⌀ 8 + 2 ⌀ 8	-	-	5 ⌀ 8 + 2 ⌀ 8
Pressure bearing V1/VV1 [pce]	8	8	9	9
Special stirrups	2	2	2	2

Design

- Static system and information on the design see page 35.
- T type K-E is also available in length L250.

Design C30/37

Schöck Isokorb® T type K-E, K-T 3.2				K-T-M3	K-E-M4	K-T-M7	K-E-M8	K-T-M9	K-T-M10
Design values with	Concrete cover CV [mm]			concrete strength class ≥ C30/37					
	CV30	CV35	CV50	$m_{Rd,y}$ [kNm/m]					
Isokorb® height H [mm]		160		24.5	22.6	40.4	44.0	48.3	50.2
	160		180	25.9	24.0	42.9	46.8	51.3	53.3
		170		27.4	25.4	45.6	49.5	54.5	56.3
	170		190	28.9	26.7	48.1	52.3	57.5	59.4
		180		30.4	28.1	50.8	55.0	60.7	62.5
	180		200	31.8	29.5	53.3	57.8	63.7	65.6
		190		33.3	30.9	56.0	60.5	66.9	68.7
	190		210	34.8	32.3	58.6	63.3	70.0	71.8
		200		36.3	33.7	61.3	66.0	73.2	74.9
	200		220	37.8	35.1	63.9	68.8	76.3	78.0
		210		39.4	36.6	66.6	71.6	79.5	81.1
	210		230	40.9	38.0	69.2	74.3	82.6	84.2
		220		42.4	39.5	71.9	77.1	85.8	87.3
	220		240	43.9	40.9	74.6	79.8	89.0	90.4
		230		45.5	42.4	77.3	82.6	92.3	93.5
	230		250	47.0	43.8	80.0	85.3	95.4	96.6
		240		48.7	45.3	82.8	88.1	98.7	99.7
	240			50.2	46.7	85.4	90.8	101.9	102.8
		250		51.8	48.2	88.2	93.6	105.2	105.9
	250			53.3	49.7	90.9	96.3	108.4	109.0
				$v_{Rd,z}$ [kN/m]					
Secondary load-bearing level			V1	42.0	99.5	99.5	99.5	99.5	124.4
			VV1	-	-	99.5/−49.8	-	-	124.4/−49.8

Design C30/37

Schöck Isokorb® T type K-E, K-T 3.2	K-T-M3	K-E-M4	K-T-M7	K-E-M8	K-T-M9	K-T-M10
Placement with	Isokorb® length [mm]					
	1000	1000	1000	1000	1000	1000
Tension bars V1/VV1	12 ⌀ 8	8 ⌀ 10	10 ⌀ 12	8 ⌀ 14	12 ⌀ 12	14 ⌀ 12
Shear force bars V1	6 ⌀ 6	8 ⌀ 8	8 ⌀ 8	8 ⌀ 8	8 ⌀ 8	10 ⌀ 8
Shear force bars VV1	-	-	8 ⌀ 8 + 4 ⌀ 8	-	-	10 ⌀ 8 + 4 ⌀ 8
Pressure bearing V1/VV1 [pce]	8	8	16	16	18	18
Special stirrup [piece]	-	-	4	4	4	4

Schöck Isokorb® T type K-E, K-T 3.2	K-T-M3	K-E-M4	K-T-M7	K-E-M8	K-T-M9	K-T-M10
Placement with	Isokorb® length [mm]					
	500	500	500	500	500	500
Tension bars V1/VV1	6 ⌀ 8	4 ⌀ 10	5 ⌀ 12	4 ⌀ 14	6 ⌀ 12	7 ⌀ 12
Shear force bars V1	3 ⌀ 6	4 ⌀ 8	4 ⌀ 8	4 ⌀ 8	4 ⌀ 8	5 ⌀ 8
Shear force bars VV1	-	-	4 ⌀ 8 + 2 ⌀ 8	-	-	5 ⌀ 8 + 2 ⌀ 8
Pressure bearing V1/VV1 [pce]	4	4	8	8	9	9
Special stirrup [piece]	-	-	2	2	2	2

Design

- T type K-E, K-T: The main load-bearing levels M1, M2, M5 and M6 achieve the maximum value of the design moment mRd,y with concrete strength class ≥ C25/30.
- T type K-E is also available in length L250.

Torsional spring stiffness

Schöck Isokorb® T type K-E, K-T 3.2				K-T-M1	K-E-M2	K-T-M3	K-E-M4	K-T-M5	K-E-M6
Torsion spring stiffness for	Concrete cover CV [mm]			Concrete strength class ≥ C20/25					
	CV30	CV35	CV50	C [kNm/rad/m]					
Isokorb® height H [mm]		160		823	1647	2142	1843	2465	2266
	160		180	923	1846	2402	2069	2783	2565
		170		1028	2057	2676	2307	3120	2884
	170		190	1140	2279	2965	2559	3476	3221
		180		1256	2513	3269	2825	3851	3576
	180		200	1379	2758	3588	3103	4246	3951
		190		1507	3014	3921	3394	4660	4343
	190		210	1641	3282	4270	3698	5093	4755
		200		1781	3561	4633	4015	5546	5185
	200		220	1926	3852	5011	4346	6018	5634
		210		2077	4154	5404	4689	6509	6101
	210		230	2234	4467	5812	5046	7019	6587
		220		2396	4792	6234	5415	7549	7091
	220		240	2564	5128	6672	5798	8097	7615
		230		2738	5476	7124	6193	8665	8156
	230		250	2917	5835	7591	6602	9253	8717
		240		3103	6205	8073	7024	9859	9296
	240			3293	6587	8569	7459	10485	9894
		250		3490	6980	9081	7906	11130	10510
	250			3692	7385	9607	8367	11795	11145

Torsional spring stiffness

Schöck Isokorb® T type K-E, K-T 3.2				K-T-M7	K-E-M8	K-T-M9	K-T-M10
Torsion spring stiffness for	Concrete cover CV [mm]			Concrete strength class ≥ C20/25			
	CV30	CV35	CV50	C [kNm/rad/m]			
Isokorb® height H [mm]		160		2892	2888	3398	3756
	160		180	3275	3276	3848	4253
		170		3681	3687	4325	4781
	170		190	4111	4123	4831	5340
		180		4565	4584	5364	5929
	180		200	5043	5068	5926	6550
		190		5545	5577	6515	7201
	190		210	6070	6111	7132	7883
		200		6619	6668	7777	8596
	200		220	7192	7251	8450	9340
		210		7788	7857	9151	10115
	210		230	8409	8488	9880	10920
		220		9053	9143	10637	11757
	220		240	9721	9823	11422	12624
		230		10412	10527	12235	13523
	230		250	11128	11255	13075	14452
		240		11867	12008	13944	15412
	240			12630	12785	14840	16403
		250		13417	13586	15765	17424
	250			14227	14412	16717	18477

Deflection/Camber | Vibrations

Deflection

The deflection calculation is used to estimate the required precamber. The arithmetic camber of the balcony slab formwork results from the calculation acc. to SS-EN 1992-1-1 (EC2) and SS-EN 1992-1-1/NA in addition to the deflection from Schöck Isokorb®. The camber of the balcony slab formwork to be given by the structural engineer/designer in the implementation plans (Basis: Calculated total deflection from cantilever slab + floor rotation angle + Schöck Isokorb®) should be so rounded that the scheduled drainage direction is maintained (round up: with drainage to the building facade, round down: with drainage towards the cantileverslab end).

Deflection ($w_ü$) as a result of the Schöck Isokorb®

$w_ü$ = $M_{Ed,GZG} / C \cdot l_k \cdot 10^3$ [mm]

Factors to be applied:

$M_{Ed,GZG}$ = Relevant bending moment [kNm/m] in the ultimate limit state for the determination of the deflection $w_ü$ [mm] from the Schöck Isokorb®.
The load combination to applied for the deflection is determined by the structural engineer.
(Recommendation: Load combination for the determination of the camber $w_ü$: determine $g + 0.3 \cdot q$, $M_{Ed,GZG}$ in the ultimate limit state)

C = Torsion spring stiffness of the Schöck Isokorb® [kNm/rad/m], see design

l_k = cantilever length [m]

Design example, see page 52

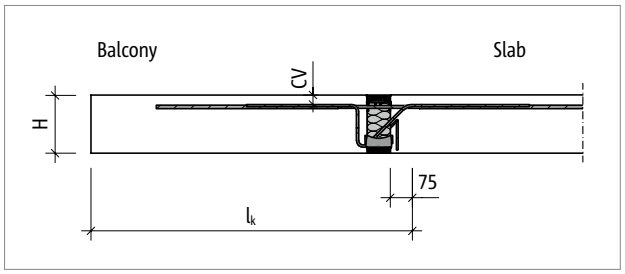

Fig. 47: Schöck Isokorb® T type K-E, K-T: Static system, cross-section

Vibrations

To ensure the serviceability, we recommend calculating the natural frequency of the balcony. The first natural frequency f_e is calculated simply with the deflection $w_ü$ as a result of the Schöck Isokorb®. At $f_e > 6$ Hz, disruptive vibrations should be ruled out. A natural frequency $f_e > 5$ Hz is sufficient when the deflection being used takes into account the bending of the balcony slab.

Natural frequency (f_e) taking into account the torsion spring stiffness of the Schöck Isokorb®

f_e = $\sqrt{(0.384 \cdot 10^3 / w_ü)} > 6$ Hz (> 5 Hz)

Factors to be applied:

$w_ü$ = deflection as a result of the Schöck Isokorb® [mm]

Design example, see page 52

Slenderness | Vibration | Expansion joint spacing

Slenderness

In order to safeguard the serviceability limit state we recommend the limitation of the slenderness to the following maximum cantilever lengths max l_k [m]:

Schöck Isokorb® T type K-E, K-T 3.2		K-E, K-T		
Maximum cantilever length with		$l_{k,max}$ [m]		
		CV30	CV35	CV50
Isokorb® height H [mm]	160	1.81	1.74	-
	170	1.95	1.88	-
	180	2.10	2.03	1.81
	190	2.25	2.17	1.95
	200	2.39	2.32	2.10
	210	2.54	2.46	2.25
	220	2.68	2.61	2.39
	230	2.83	2.76	2.54
	240	2.98	2.90	2.68
	250	3.12	3.05	2.83

Maximum cantilever length

- The maximum cantilevered length for ensuring the serviceability is a benchmark. It can be limited by the load bearing capacity when using the Schöck Isokorb® T type K-E, K-T.
- The table value for the maximum cantilevered length $l_{k,max}$ should be reduced by 10% for heavier balustrades.

Maximum expansion joint spacing

If the component length exceeds the maximum expansion joint spacing e, then expansion joints must be incorporated into the external concrete components at right angles to the insulating layer in order to limit the effect as a result of temperature changes. Because the layout of the Isokorb® is only possible along the side of the component due to the installation in conjunction with the external concrete precast element, corners of balconies, parapets and balustrades cannot form any fixed points.

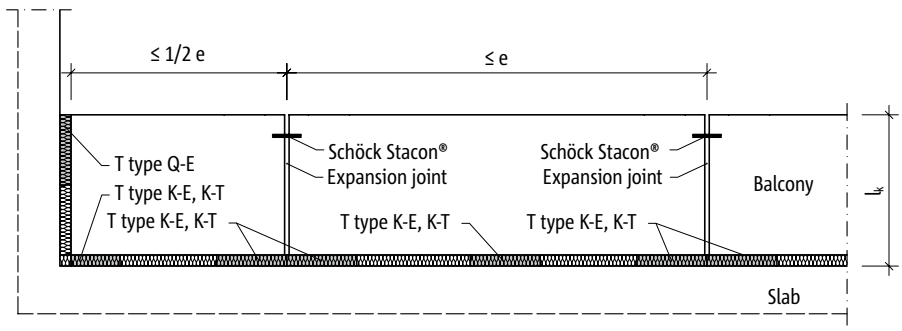

Fig. 48: Schöck Isokorb® T type K-E, K-T: Expansion joint spacing

Schöck Isokorb® T type K-E, K-T 3.2		M1 – M5	M6, M7, M9, M10	M8
Maximum expansion joint spacing when		e [m]		
Insulating element thickness [mm]	80	13.5	13.0	11.7

Edge distances

The Schöck Isokorb® must be so arranged at the expansion joint that the following conditions are met:

- For the centre distance of the tension bars from the free edge resp. from the expansion joint: $e_R \geq 50$ mm applies.
- For the centre distance of the compression bars from the free edge resp. exapansion joint: $e_R \geq 100$ mm applies.

Product description

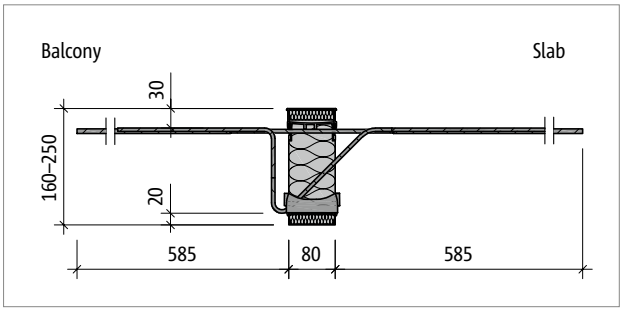

Fig. 49: Schöck Isokorb® T type K-T-M1, K-E-M2, K-T-M3: Product section

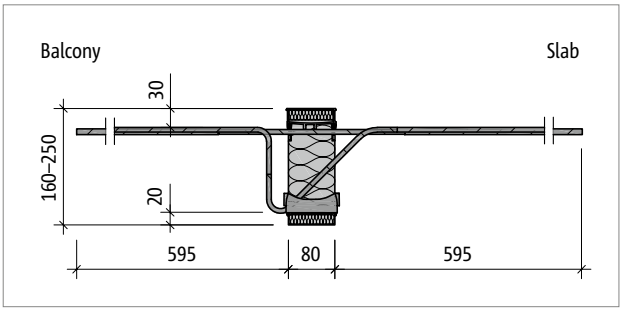

Fig. 50: Schöck Isokorb® T type K-E-M4: Product section

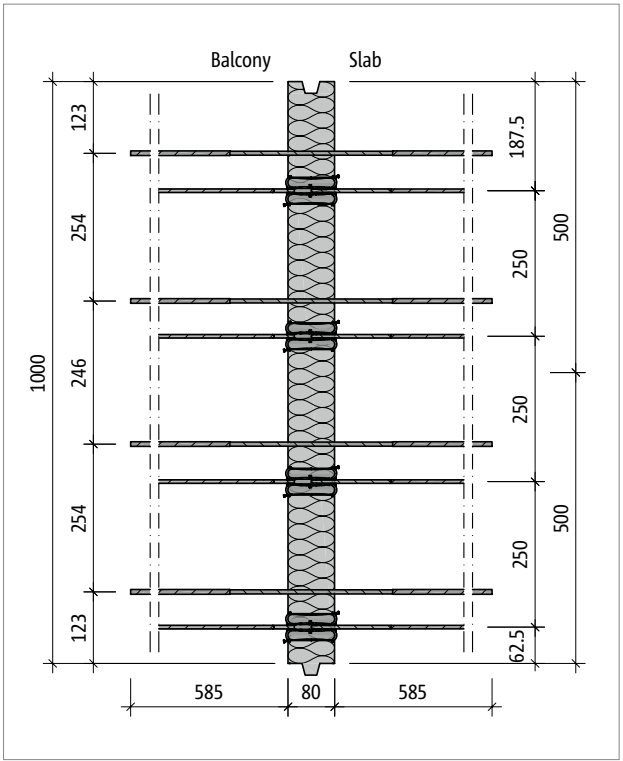

Fig. 51: Schöck Isokorb® T type K-T-M1: Product layout

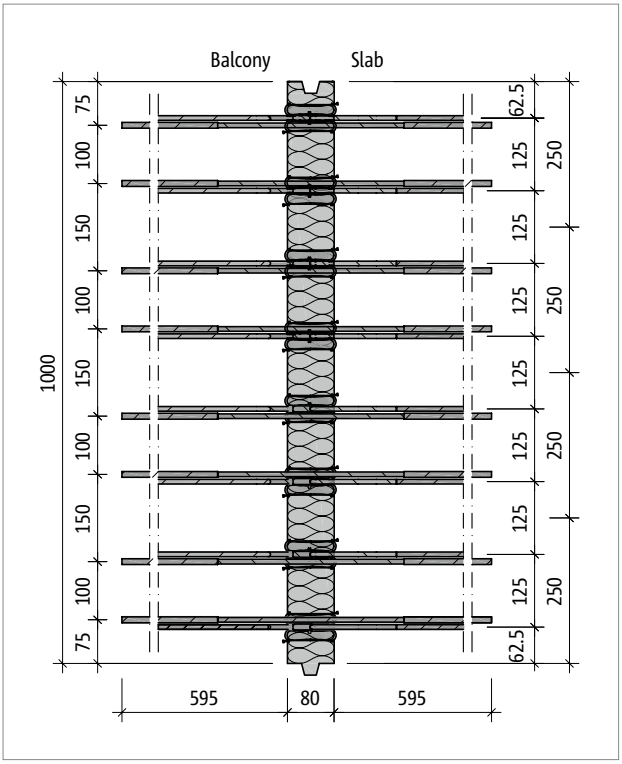

Fig. 52: Schöck Isokorb® type K-E-M4: Product layout

Product information

- For additional 2D and 3D product drawings contact our Design Support department.
- Concrete cover of the tension bars: CV30 = 30 mm, CV35 = 35 mm, CV50 = 50 mm

Product description

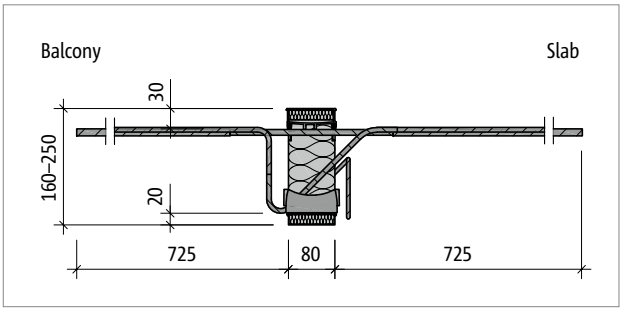

Fig. 53: Schöck Isokorb® T type K-E-M6, K-T-M7, -M9, -M10: Product section

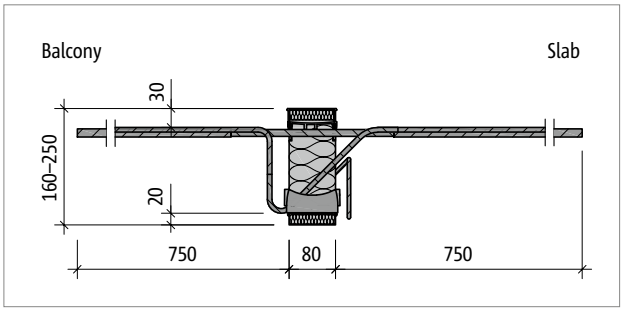

Fig. 54: Schöck Isokorb® T type K-E-M8: Product section

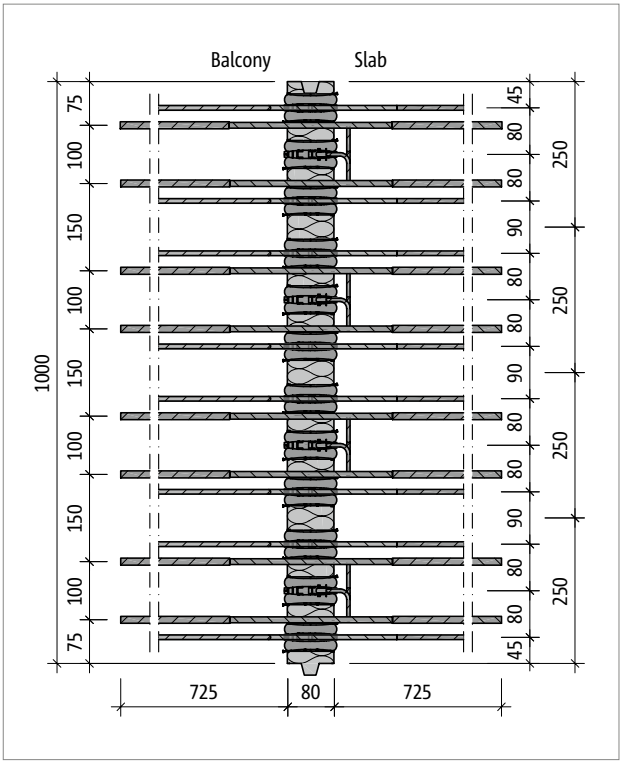

Fig. 55: Schöck Isokorb® T type K-E-M6: Product layout

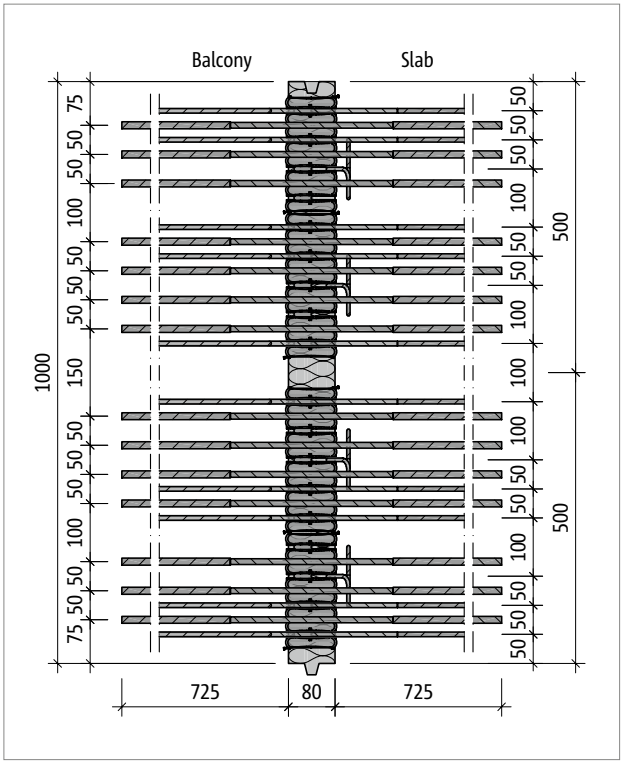

Fig. 56: Schöck Isokorb® T type K-T-M10-V1: Product layout

Product information

- For additional 2D and 3D product drawings contact our Design Support department.
- Concrete cover of the tension bars: CV30 = 30 mm, CV35 = 35 mm, CV50 = 50 mm

Product description

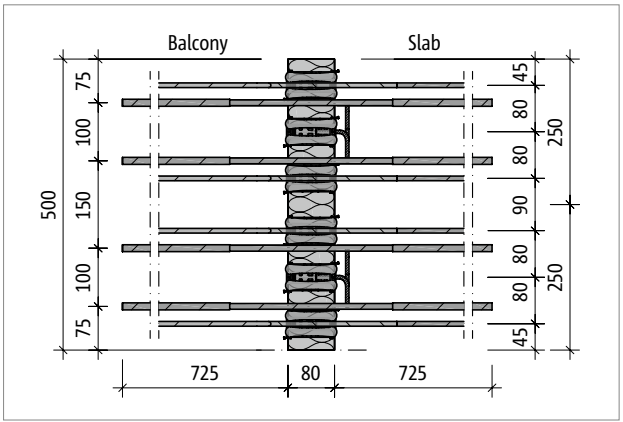

Fig. 57: Schöck Isokorb® T type K-E-M6: Product layout of the variant length L500

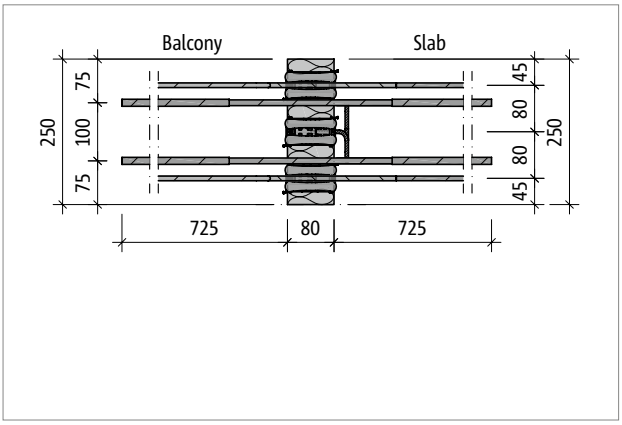

Fig. 58: Schöck Isokorb® T type K-E-M6: Product layout of the variant length L250

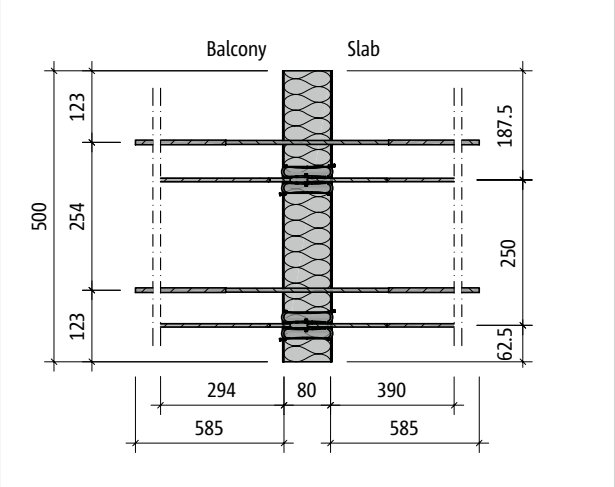

Fig. 59: Schöck Isokorb® T type K-T-M1: Product layout of the variant length L500

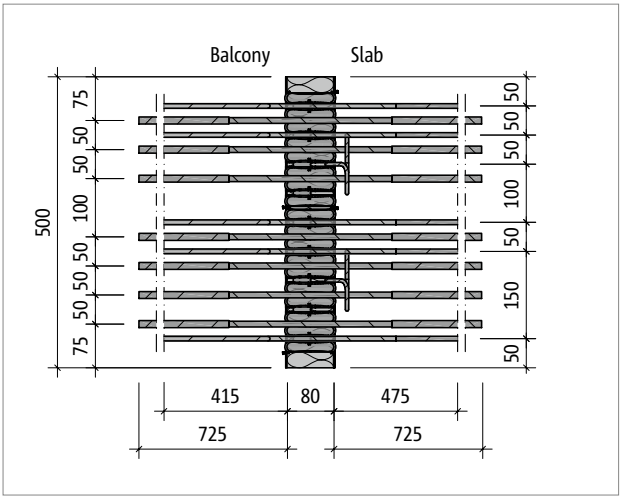

Fig. 60: Schöck Isokorb® T type K-T-M10: Product layout of the variant length L500

Product information

- For additional 2D and 3D product drawings contact our Design Support department.
- Concrete cover of the tension bars: CV30 = 30 mm, CV35 = 35 mm, CV50 = 50 mm
- Length: L = 250 mm, L = 500 mm or L = 1000 mm for Schöck Isokorb® T type K-E
- Length: L = 500 mm or L = 1000 mm for Schöck Isokorb® T type K-T

On-site reinforcement

Without edge beams

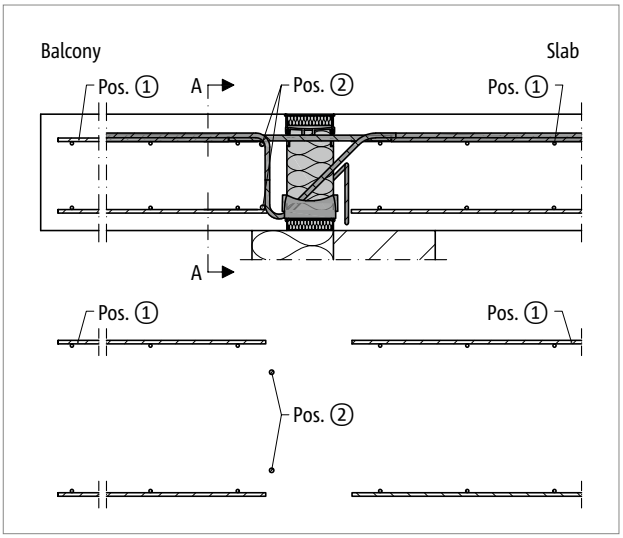

Fig. 61: Schöck Isokorb® T type K-E, K-T: On site reinforcement; inner slab edge with wall support

With edge beams

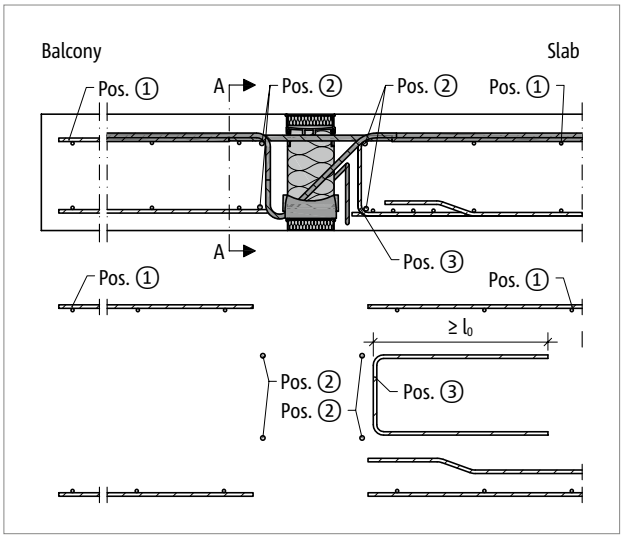

Fig. 62: Schöck Isokorb® T type K-E, K-T: On site reinforcement; floor with edge beams

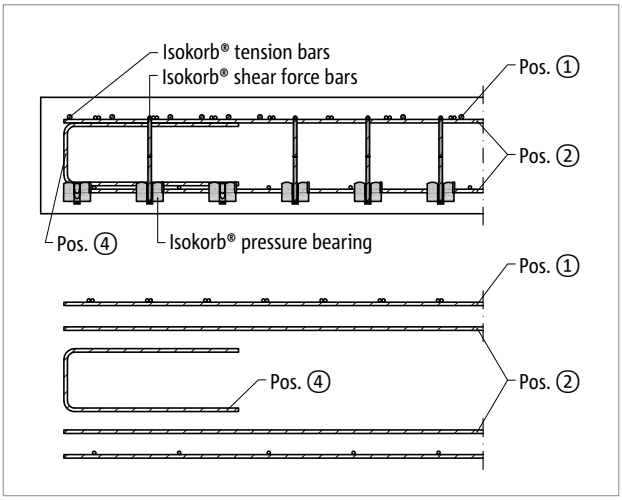

Fig. 63: Schöck Isokorb® T type K-E, K-T: On-site reinforcement on the balcony side in section A-A; Pos.4 = supplementary edge reinforcement on the free edge perpendicular to the Schöck Isokorb®

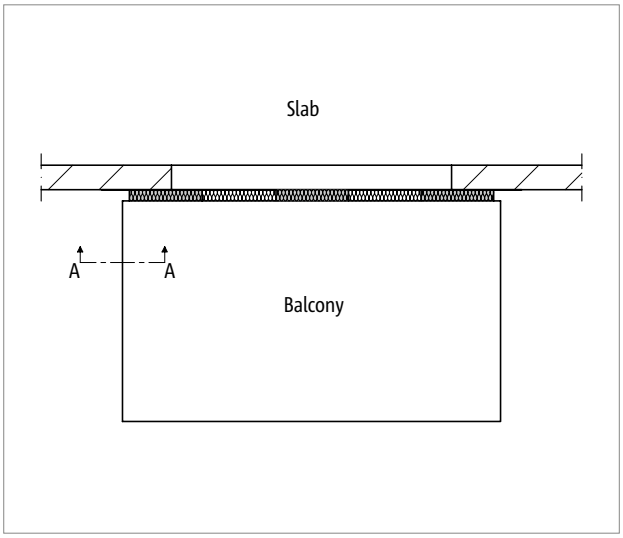

Fig. 64: Schöck Isokorb® T type K-E, K-T: Section A-A

Information on side reinforcement

- The side reinforcement of the slab edge parallel to the Schöck Isokorb® is covered on-site by the integrated suspension reinforcement of the Schöck Isokorb®.

On-site reinforcement

Recommendation for the on-site connection reinforcement

Details on the overlap reinforcement for Schöck Isokorb® with a loading of 100 % of the maximum design moment with C20/25 or C25/30; structurally selected: a_s overlap reinforcement ≥ a_s Isokorb® tension bars.

Schöck Isokorb® type K-E, K-T 3.2			K-T-M1	K-E-M2	K-T-M3	K-E-M4	K-T-M5
On-site reinforcement for	Location	Height [mm]	Concrete strength class ≥ C25/30				
Overlapping reinforcement							
Pos. 1 [mm²/m]	Balcony/ floor side	160–250	201	402	604	628	804
Steel bars along the insulation joint							
Pos. 2	Balcony side	160–250	2 ⌀ 8				
	Floor side		4 ⌀ 8				
Edge and splitting tensile reinforcement							
Pos. 3 [mm²/m]	Floor side	160–250	125	125	125	125	287
Side reinforcement at the free edge							
Pos. 4	Balcony/ floor side	160–250	According to SS-EN 1992-1-1 (EC2), 9.3.1.4				

Schöck Isokorb® T type K-E, K-T 3.2			K-E-M6	K-T-M7	K-E-M8	K-T-M9	K-T-M10
On-site reinforcement for	Location	Height [mm]	Concrete strength class ≥ C25/30				
Overlapping reinforcement							
Pos. 1 [mm²/m]	Balcony/ floor side	160–250	905	1131	1232	1357	1583
Steel bars along the insulation joint							
Pos. 2	Balcony side	160–250	2 ⌀ 8				
	Floor side		4 ⌀ 8				
Edge and splitting tensile reinforcement							
Pos. 3 [mm²/m]	Floor side	160–250	421	421	421	451	520
Side reinforcement at the free edge							
Pos. 4	Balcony/ floor side	160–250	According to SS-EN 1992-1-1 (EC2), 9.3.1.4				

Information about on-site reinforcement

- Alternative connection reinforcements are possible. The rules as per SS-EN 1992-1-1 (EC2) and SS-EN 1992-1-1/NA apply for calculating the lap length. A reduction of the required lap length using m_{Ed}/m_{Rd} is permitted.
- The reinforcement at the free edges Pos. 4 of the structural component perpendicular to the Schöck Isokorb® should be selected as low as possible so that it can be arranged between the upper and lower reinforcement layer.

Tight fit/Concreting section | Precast/Compression joints

Tight fit/Concreting section

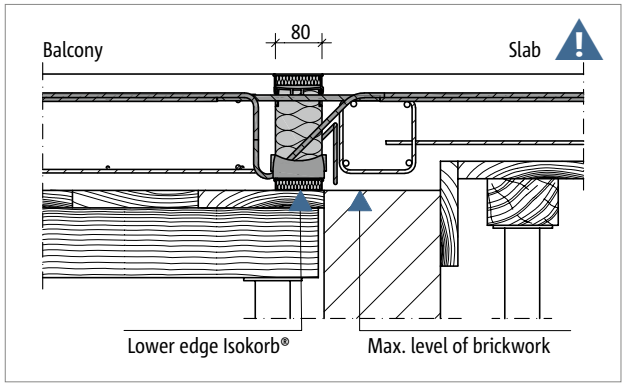

Fig. 65: Schöck Isokorb® T type K-E, K-T: In-situ concrete construction with height offset floor on masonry wall

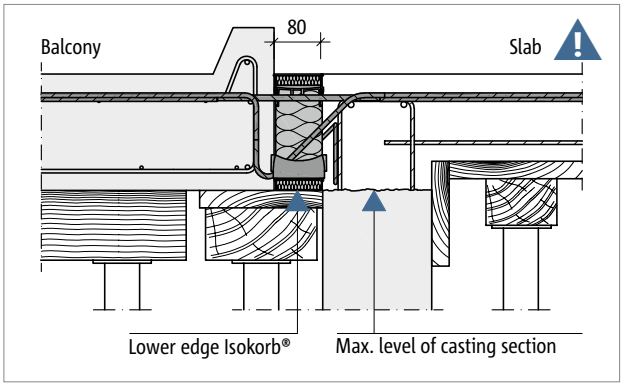

Fig. 66: Schöck Isokorb® T type K-E, K-T: Fully-finished balcony with height offset floor on reinforced concrete wall

⚠ Hazard note: Tight fit with different height levels

The tight fit of the pressure bearings to the freshly poured concrete is to be ensured, therefore the upper edge of the masonry respectively of the concreting section is to be arranged below the lower edge of the Schöck Isokorb®. This is to be taken into account above all with a different height level between inner slab and balcony.

- The concreting joint and the upper edge of the masonry are to be arranged below the lower edge of the Schöck Isokorb®.
- The position of the concreting section is to be indicated in the formwork and reinforcement drawing.
- The joint planning is to be coordinated between precast concrete plant and construction site.

Precast/Compression joints

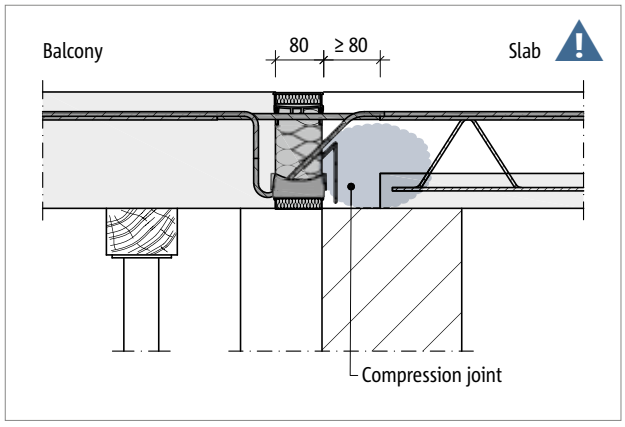

Fig. 67: Schöck Isokorb® T type K-E, K-T: Installation in conjunction with prefabricated slab with wall support, compression joint on the floor side

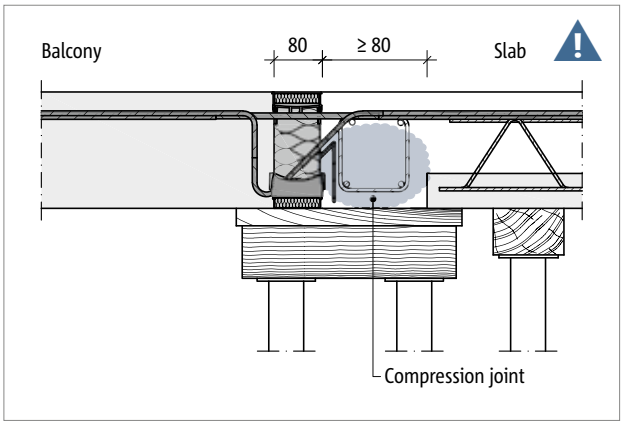

Fig. 68: Schöck Isokorb® T type K-E, K-T: Installation in conjunction with prefabricated slab with edge beams, compression joint on the floor side

⚠ Hazard note: Compression joints

Compression joints are joints which, with unfavourable loading combination, remain always in compression (SS-EN 1992-1-1/NA, NCI to 10.9.4.3(1)). The underside of a cantilever balcony is always a compression zone. If the cantilever balcony is a complete precast part or an element slab, and/or the floor is an element slab, then the definition of the standard is effective.

- Compression joints are to be indicated in the formwork and reinforcement drawing!
- Compression joints between precast parts are always to be grouted using in-situ concrete. This also applies for compression joints with the Schöck Isokorb®!
- With compression joints between precast parts (on the inner slab or balcony side) and the Schöck Isokorb®, a in-situ concrete resp. pour of ≥ 80 mm width is to be cast. This is to be entered in the working drawings.
- We recommend the installation of the Schöck Isokorb® and/or the pouring of the balcony-side compression joint already in the precast concrete plant.

Precast construction

Precast part construction – Fully precast balcony
IDock1 without edge beams

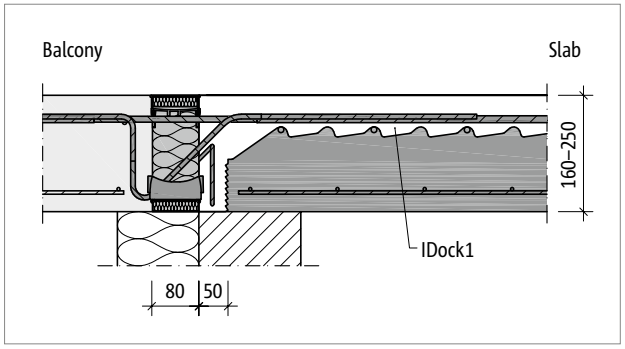

Fig. 69: Schöck Isokorb® T type K-E: Connection of balconies with slab thicknesses of 160 mm to 250 mm with IDock1

IDock2 with edge beams

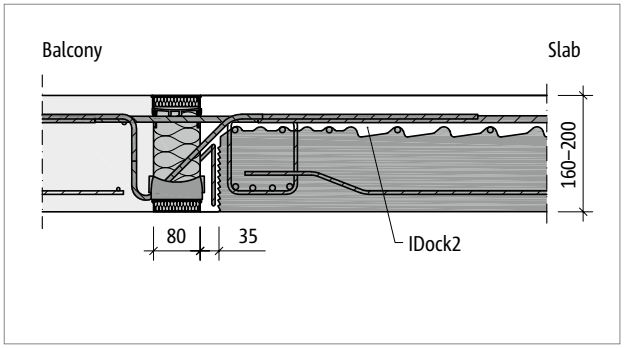

Fig. 70: Schöck Isokorb® T type K-E: Connection of balconies with slab thicknesses of 160 mm to 200 mm with IDock2

Precast part construction

- The Schöck Isokorb® T type K-E with Schöck IDock® can be used for a flexible design of the construction process See Schöck IDock® technical information.

Design example

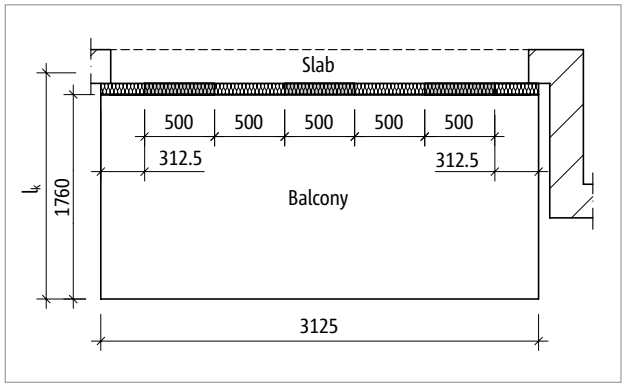

Fig. 71: Schöck Isokorb® T type K-E, K-T: Static system, layout

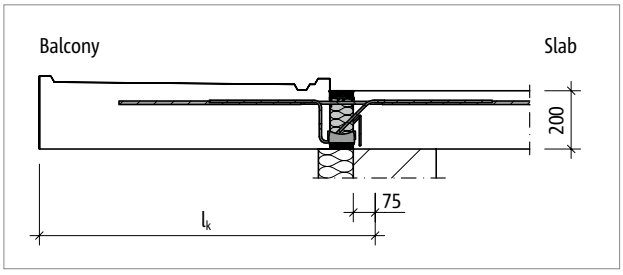

Fig. 72: Schöck Isokorb® T type K-E, K-T: Static system, cross-section

Static system and load assumptions

Geometry:	Schöck Isokorb® height	h = 200 mm
	cantilever length	l_k = 1.92 m
	Average balcony slab thickness	h = 230 mm
Load assumptions:	balcony slab	g = 5.75 kN/m²
	live load	q = 3.5 kN/m²
	edge load (balustrade)	g_R = 1.0 kN/m
Exposure classes:	external XC 4	
	internal XC 1	
chosen:	Concrete strength class C25/30 for floor	
	Concrete strength class C45/55 for balcony	
	Concrete cover c_v = 35 mm for Schöck Isokorb® tension bars	
Connection geometry:	no height offset, no floor downstand beam, no balcony upstand	
Support floor:	floor edge directly supported	
Support balcony:	restraint of cantilever slab using T type K-E	

Proof of limits of load-bearing capacity (moment stress and shear force)

The calculation takes into account the gaps shown in the above drawing with the proportion of the balcony length to the length of the connection with Isokorb®(= 3.13 m / 1.50 m).

Internal forces:

m_{Ed} = -(0.5 • [3.125 • (γ_G • g + γ_Q • q) + 2 • γ_G • g_R] • l_k^2 + 3.125 • γ_G • g_R • l_k) / 1.50

m_{Ed} = -(0.5 • [3.125 • (1.2 • 5.75 + 1.5 • 3.5) + 2 • 1.2 • 1.0] • 1.92² + 3.125 • 1.2 • 1.0 • 1.92) / 1.50

= +58.4 kNm/m

v_{Ed} = +([3.125 • [(γ_G • g +γ_Q • q) + 2 • γ_G • g_R] • l_k + 3.125 • γ_G • g_R) / 1.50

v_{Ed} = +([3.125 • [(1.2 • 5.75 + 1.5 • 3.5) + 2 • 1.2 • 1.0] • 1.92 + 3.125 • 1.2 • 1.0) / 1.50

= +54.2 kN/m

Selected: **3 pieces of Schöck Isokorb® T type K-E-M8-V1-REI120-CV35-H200-L500**

m_{Rd} = -61.1 kNm/m (see page 37) > m_{Ed}

v_{Rd} = +99.5 kN/m (see page 37) > v_{Ed}

Design example

Proof of ultimate limit state (deflection/precamber, vibrations)

The calculation takes into account the gaps shown in the above drawing with the proportion of the balcony length to the length of the connection with Isokorb® (= 3.125 m / 1.50 m).

Torsion spring stiffness:	C	= 6668 kNm/rad/m (from table, see page 41)
Quasi-state load combination:	$g + 0.3 \cdot q$	
	(Recommendation for the calculation of the precamber from Schöck Isokorb®)	
	$M_{Ed,GZG}$ Determine in ultimate limit state	
	$M_{Ed,GZG}$	$= -(0.5 \cdot [3.125 \cdot (g + \psi_{2,i} \cdot q) + 2 \cdot g_R] \cdot l_k^2 + 3.125 \cdot g_R \cdot l_k) / 1.50$
	$M_{Ed,GZG}$	$= -(0.5 \cdot [3.125 \cdot (5.75 + 0.3 \cdot 4.0) + 2 \cdot 1.0] \cdot 1.92^2 + 3.125 \cdot 1.0 \cdot 1.92) / 1.50$
		= +32.4 kNm/m
Deflection	$w_ü$	$= M_{Ed,GZG} / C \cdot l_k \cdot 10^3$ [mm]
	$w_ü$	$= 32.4 / 6668 \cdot 1.92 \cdot 10^3 = 9.3$ mm
Natural frequency	f_e	$= \sqrt{(0.384 \cdot 10^3 / 9.3)} = 6.4$ Hz > 6 Hz
	=> no disruptive vibrations	
Layout of expansion joints	Length of balcony:	3.125 m < 11.70 m
	=> no expansion joints required	

☑ Check list

- ☐ Is the same height level planned for the balcony and floor in relation to the upper edges of the shell?
- ☐ For fully precast balconies, are any necessary gaps for the frontal transport anchors and rainwater downpipes for internal drainage taken into account?
- ☐ Have the loads on the Schöck Isokorb® connection been specified at design level?
- ☐ Has the cantilevered system length or the system support width been taken as a basis?
- ☐ Has the additional proportionate deflection resulting from the Schöck Isokorb® been taken into account?
- ☐ Is the drainage direction taken into account with the resulting camber information? Is the degree of camber entered in the working drawings?
- ☐ Is the minimum slab thickness H_{min} for the respective Schöck Isokorb® type taken into account?
- ☐ Are the recommendations for the limitation of the susceptibility to vibration observed?
- ☐ Are the maximum allowable expansion joint spacings taken into account?
- ☐ Are the Schöck FEM guidelines taken into account with the calculation using FEM?
- ☐ Is the relevant concrete strength class taken into account when selecting the design and calculation table?
- ☐ Have the fire protection requirements been clarified?
- ☐ Have the required cast-in-place strips of concrete for the T type K-E and T type K-T, in the compression joint (width ≥ 80 mm from pressure bearing element), in conjunction with semi-precast balcony slabs, been entered in the construction drawings?
- ☐ Have the requirements for on-site reinforcement of connections been defined in each case?
- ☐ Has the minimum slab thickness (≥ 180 mm) and the required 2nd layer (-CV50) been taken into account for the corner balcony?
- ☐ Has a soft elastic joint been taken into account between the upper edge of the facing shell and the balcony?
- ☐ Is the type designation of the Schöck Isokorb® explicit in the plans? - Example: Schöck Isokorb® T type K-E-M6-V1-REI120-CV30-H200-L1000